Hamiltonian Simulation and Estimation

From qubits to real world applications

Juan de Gracia, PhD. Researcher at RISE Research Institutes of Sweden

Quick outline

- Part 1: The Hamiltonian Simulation
- Part 2: Implementing the simulation
  - Quantum Phase Estimation
  - Variational Quantum Eigensolver

The Hamiltonian Simulation

The Schrödinger Equation

- In Quantum Mechanics the evolution of a quantum system is given by the time dependent Schrödinger Equation (1926):
  $i\hbar \frac{d}{dt} |\psi(t)\rangle = H |\psi(t)\rangle$

- The general solution of this equation is: $|\psi(t)\rangle = U(t) |\psi(0)\rangle, \qquad U(t) = e^{-\frac{i}{\hbar}Ht}.$

- H is the **Hamiltonian operator** which gives **the total energy and** is **Hermitian** $(H^\dagger = H)$. >> $H |E_k\rangle = E_k |E_k\rangle$

  1. Their eigenvalues are real, which guarantees that observable quantities such as energy have real measurement outcomes.

  2. Their eigenvectors corresponding to distinct eigenvalues are orthogonal.

  3. The set of eigenvectors forms a complete basis for the Hilbert space.

- Any wavefuntion can be expressed as: $|\psi\rangle = \sum_k c_k |E_k\rangle, \qquad H = \sum_k E_k |E_k\rangle\langle E_k|.$

- Coming back at $|\psi\rangle = \alpha|0\rangle + \beta|1\rangle$, this is the result of applying the **Z-Pauli** on the qubit state:
  $Z = (+1)|0\rangle\langle 0| + (-1)|1\rangle\langle 1|$ >> **The superposition is a natural consequence of the Z operator being Hermitian!**

The Hamiltonian Simulation Problem

- The goal of Hamiltonian simulation is to reproduce the action of the time-evolution operator: $U(t) = e^{-\frac{i}{\hbar}Ht}$

- Remembering that H is Hermitian: $H|E_k\rangle = E_k|E_k\rangle$, the action of $U(t)$ will be $U(t)|E_k\rangle = e^{-\frac{i}{\hbar}E_k t}|E_k\rangle$ >>. The evolution of an eigenstate is a phase rotation proportional to E_k!

- Then the **Hamiltonian Simulation** problem becomes reproducing the phase rotations for all the eigenstates of H at once.

- A quantum computer only implements a finite set of 1 and 2 qubit quantum gates >> $U(t)$ needs to be expressed as a product of simpler unitaries: $U(t) \approx U_1 U_2 \cdots U_m$

- Since a quantum computer works in computational basis $\{|0\rangle, |1\rangle\}^{\otimes n}$ the operator $U(t)$ needs to be translated into computational basis.

Decomposing the unitary operators into gates

- Any physical n-body hamiltonian can be decomposed into a sum of smaller terms: $H = \sum_j H_j$

- If all the terms H_j commute $([H_j, H_k] = H_j H_k - H_k H_j = 0)$ the exponential is the product of all the smaller terms: $e^{-\frac{i}{\hbar}\sum_j H_j t} = \prod_j e^{-\frac{i}{\hbar} H_j t}$

- In any physical H this many terms are not commuting >> **Trotter-Suzuki** formula:

$$e^{-\frac{i}{\hbar}\sum_j H_j t} \approx \left(\prod_j e^{-\frac{i}{\hbar} H_j \Delta t}\right)^n, \qquad \Delta t = \frac{t}{n}$$

- Reproduces the time via discrete time intervals

- In that approximation, each exponential $e^{-\frac{i}{\hbar} H_j \Delta t}$ is a block of quantum gates acting on a few qubits >> More steps n (more blocks) more accuracy >> More hardware requirements!

Translating Physical Hamiltonians to the Quantum Computer

- Physical Hamiltonians (in Chemistry and Physics) use fermionic or bosonic operators (second quantization). The molecular Hamiltonian looks like this: $H = \sum_{p,q} h_{pq}\, a_p^\dagger a_q + \frac{1}{2} \sum_{p,q,r,s} h_{pqrs}\, a_p^\dagger a_q^\dagger a_r a_s$

- One needs to represent this with qubits >> Translate into Pauli operators >> Mapping:

  - Jordan-Wigner >> direct translation $a_p^\dagger = \frac{1}{2}(X_p - iY_p) \bigotimes_{j<p} Z_j, \qquad a_p = \frac{1}{2}(X_p + iY_p) \bigotimes_{j<p} Z_j\,.$

  - Bravyi-Kitaev >> Redistributes parity info more efficiently >> Shorter circuits.

- The Hamiltonian becomes: $H = \sum_i h_i P_i, \qquad P_i \in \{I, X, Y, Z\}^{\otimes n}$

- Once the Hamiltonian is expressed in Pauli matrices, the corresponding unitary evolution $U(t) = e^{-\frac{i}{\hbar}Ht}$ can be decomposed into gates and executed as a quantum circuit.

Implementing the simulation

Ways to go

- We have seen that the whole Hamiltonian Simulation problem is based on:

  1. Translating the Hamiltonian into the language of quantum computers

  2. Implementing the time evolution operator $U(t) = e^{-\frac{i}{\hbar}Ht}$

- There are two well established approaches to simulate the evolution operator:

  - Quantum Phase Estimation (QPE)

  - Variational Quantum Eigensolver (VQE)

Recap on Controlled Unitary Gates

- Let's come back at the **Controlled Unitary Gates**

- Definition: $\mathrm{CU} = |0\rangle\langle 0| \otimes I + |1\rangle\langle 1| \otimes U = P_0 \otimes I + P_1 \otimes U$

- Applied to a two qubit system with a control $|c\rangle$ with the trigger value set in $|1\rangle$ and a target being an arbitrary qubit $|\psi\rangle$, the action of the Controlled unitary is:
$$\mathrm{CU}\left(|c\rangle \otimes |\psi\rangle\right) = (|0\rangle\langle 0||c\rangle) \otimes I|\psi\rangle + (|1\rangle\langle 1||c\rangle) \otimes U|\psi\rangle$$
$$= \begin{cases} |0\rangle \otimes |\psi\rangle, & \text{if } |c\rangle = |0\rangle, \\ |1\rangle \otimes U|\psi\rangle, & \text{if } |c\rangle = |1\rangle\,. \end{cases}$$

- This means that if the first qubit controls the application of the unitary by setting a trigger value, hence called **controlled unitary**

Superposition and phase kickback

- A very neat property of CU gates arise when we set the control qubit $|c\rangle$ in a superposition by, for example, applying a Hadamard gate over the control set in $|c\rangle = |0\rangle$ >>
  $H|0\rangle = \frac{1}{\sqrt{2}}(|0\rangle + |1\rangle) = |+\rangle$

- If we apply the CU gate over this 2 qubit system:

$$\mathrm{CU}\left(|+\rangle \otimes |\psi\rangle\right) = \frac{1}{\sqrt{2}}\Big(\mathrm{CU}\left(|0\rangle \otimes |\psi\rangle\right) + \mathrm{CU}\left(|1\rangle \otimes |\psi\rangle\right)\Big)$$
$$= \frac{1}{\sqrt{2}}\Big(|0\rangle \otimes |\psi\rangle + |1\rangle \otimes U|\psi\rangle\Big).$$

- This means that the **control and the target become entangled >>** Now if we measure in the control we know if the target got the unitary applied or not without measuring the target!!

Superposition and phase kickback

- This is particularly useful if $|\psi\rangle$ is an **eigenstate of** U such that: $U|\psi\rangle = e^{2\pi i\varphi}|\psi\rangle$
- Applying this to the control in $|+\rangle$
- $\mathrm{CU}\left(|+\rangle \otimes |\psi\rangle\right) = \frac{1}{\sqrt{2}}\left(|0\rangle \otimes |\psi\rangle + e^{2\pi i\varphi}|1\rangle \otimes |\psi\rangle\right).$
- Factoring out the target:
- $\mathrm{CU}\left(|+\rangle \otimes |\psi\rangle\right) = \left(\frac{|0\rangle + e^{2\pi i\varphi}|1\rangle}{\sqrt{2}}\right) \otimes |\psi\rangle.$
- The eigenphase $e^{2\pi i\varphi}$ that was a property of $|\psi\rangle$ now appears as a relative phase between $|0\rangle$ and $|1\rangle$ in the control qubit. The phase information **kicks back from target to control**. >> **We can measure properties of the target without collapsing the target!**

Controlled powers of a unitary

- Once we have the phase kicked back to the register we would like to measure the phase with a certain precision >> Information in the register: $\frac{|0\rangle + e^{2\pi i\varphi}|1\rangle}{\sqrt{2}}$ >> In this context the phase encodes the **fraction of the circumference that describes the phase difference >> That is a number between 0 and 1.**
- The accuracy then will depend of **how many digits we can recover.**
- In order to increase the accuracy of φ we can apply powers of U >> Make a small number larger!
- Expression: $\mathrm{CU}^{2k}\left(|+\rangle \otimes |\psi\rangle\right) = \frac{1}{\sqrt{2}}\left(|0\rangle \otimes |\psi\rangle + e^{2\pi i 2^k \varphi}|1\rangle \otimes |\psi\rangle\right)$. >> We multiply the phase by 2^k >> We make the number larger and if the phase is small >> It's like making zoom on the phase!
- If we use 2 control qubits: $\frac{1}{2}\left(|00\rangle + e^{2\pi i\varphi}|01\rangle + e^{4\pi i\varphi}|10\rangle + e^{6\pi i\varphi}|11\rangle\right) \otimes |\psi\rangle$.
- General case for n registers: $\frac{1}{2^{n/2}}\sum_{j=0}^{2^n-1} e^{2\pi i j\varphi}|j\rangle \otimes |\psi\rangle$.

Quantum Fourier Transform

- Once we have accumulated the phase rotations on the register $\frac{1}{2^{n/2}} \sum_{j=0}^{2^n-1} e^{2\pi i j \varphi} |j\rangle \otimes |\psi\rangle$.
- The Quantum Fourier Transform (QFT) performs this operation: $\mathrm{QFT}\,|j\rangle = \frac{1}{\sqrt{N}} \sum_{k=0}^{N-1} e^{2\pi i j k/N} |k\rangle$.
- So, in our 2 register qubits example: $|\Phi\rangle = \frac{1}{2} \sum_{j=0}^{3} e^{2\pi i j \varphi} |j\rangle$. Applying the **inverse of the QFT** will give: $\mathrm{QFT}^{-1}|\Phi\rangle = |\varphi_1 \varphi_2\rangle$. >> The phase can be reconstructed as: $\varphi = 0.\varphi_1\varphi_2 = \frac{\varphi_1}{2} + \frac{\varphi_2}{4}$
- Example: $\mathrm{QFT}^{-1}|\Phi\rangle = |11\rangle$. Then the phase is $0.11_2 = \frac{1}{2} + \frac{1}{4} = \frac{3}{4} = 0.75$
- Then we can recover the eigenvalue of the operator as: $\lambda = e^{2\pi i \varphi}$.

Quantum Phase Estimation

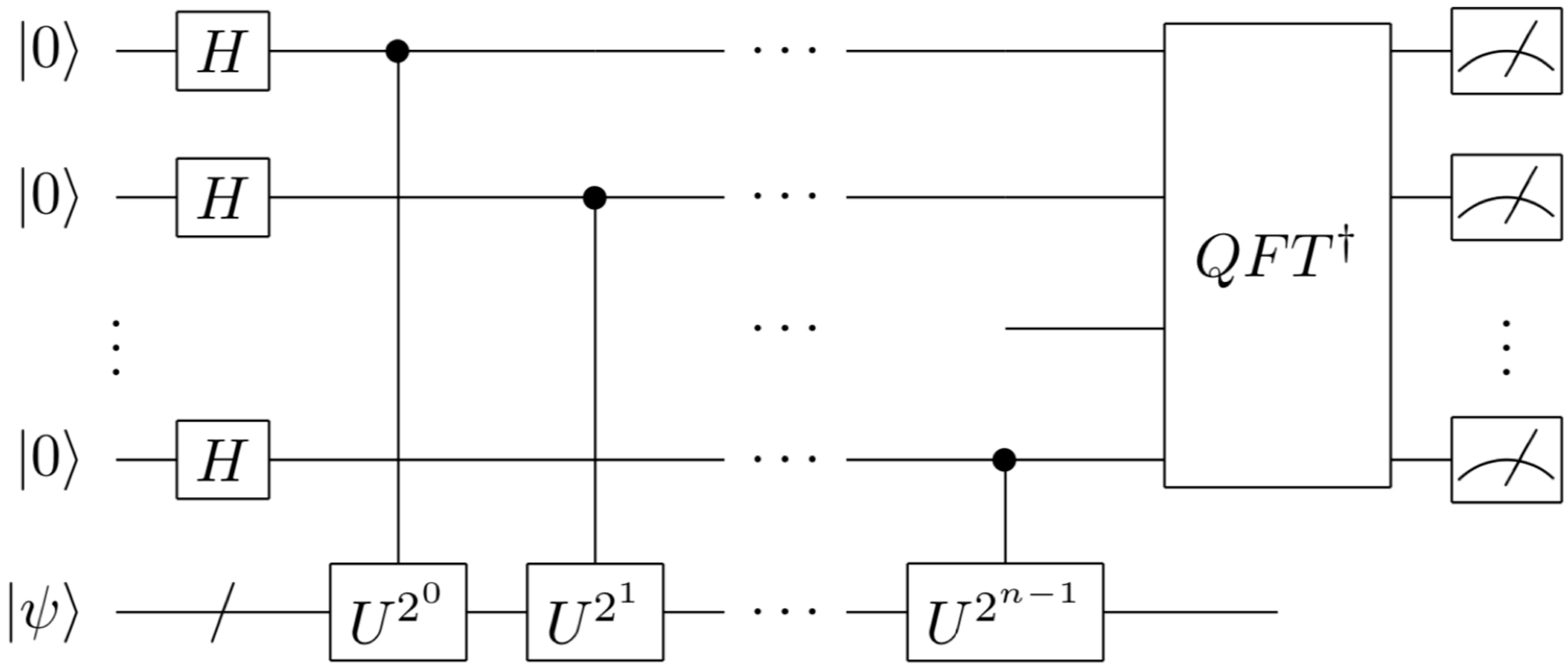

What is the point of this?

- If instead of using an exact eigenstate we use an arbitrary state expanded into the basis of the operator: $|\psi\rangle = \sum_k c_k |E_k\rangle$ we will obtain the eigenstate E_k with a probability of $|c_k|^2$

  >> Solve the eigenvalue problem without diagonalizing a $2^n \times 2^n$ matrix

- Limitation: If we have an approximate eigenstate (f.e. in molecular simulations) the eigenstate shall have a good overlap with the real eigenstate. >> State preparation is difficult >> One needs to repeat the algorithm many times

- More precision, more qubits >> Longer coherence times to apply all the controlled gates + the inverse QFT >> Hardware limitations

The Variational Principle

- The VQE is grounded in the variational method in quantum mechanics >> Widely used in Quantum Chemistry
- Understanding the Variational method:
- Let us consider a Hamiltonian H with eigenstates $\{\,|E_k\rangle\}$ and the corresponding eigenvalues $\{E_k\}$. Because H is hermitian: $H|E_k\rangle = E_k|E_k\rangle$. Now, in order to have the exact eigenvalues (energies) we need to solve the Schrödinger equation, which has no explicit solution for n-body.
- Luckily, one can prepare a normalized state $|\psi\rangle$ and the expectation value will be $\langle\psi|H|\psi\rangle = E_\psi \geq E_0$ being E_0 the true ground state energy.
- One can then parametrize a wavefunction $|\psi(\theta)\rangle$ and find the parameters minimize the energy, namely minimizing: $\boldsymbol{\theta}^* = \arg\min_{\boldsymbol{\theta}} \dfrac{\langle\psi(\boldsymbol{\theta})|H|\psi(\boldsymbol{\theta})\rangle}{\langle\psi(\boldsymbol{\theta})|\psi(\boldsymbol{\theta})\rangle}, \qquad E_{\min} = E(\boldsymbol{\theta}^*)\,.$
- The optimized wavefuntion $|\psi(\boldsymbol{\theta}^*)\rangle$ provides the closest approximation to the true ground state energy.

The Variational Quantum Eigensolver

- Following the same idea, one can use a parametrize **ansatz** for the wavefuntion by applying a parametrized unitary $U(\theta)$ over a initial state (usually $|0\rangle^{\otimes N}$). Therefore the ansatz wavefunction is: $|\psi(\theta)\rangle = U(\theta)|0\rangle^{\otimes N}$ where N is the number of qubits.

- The Hamiltonian gets mapped into Pauli strings: $H = \sum_i h_i P_i, \qquad P_i \in \{I, X, Y, Z\}^{\otimes N}$

- Then the expectation value can be measured in the Quantum Computer (fast) $E(\boldsymbol{\theta}) = \langle\psi(\boldsymbol{\theta})|H|\psi(\boldsymbol{\theta})\rangle = \sum_i h_i \langle\psi(\boldsymbol{\theta})|P_i|\psi(\boldsymbol{\theta})\rangle\,.$

- Since Pauli strings has eigenvalues +1 or -1. The expectation value is measured by repeating measurements of the circuit >> **Every energy evaluation requires multiple shots**

- The energy $E(\boldsymbol{\theta})$ is passed to a classical computer to optimize the parameters. $\boldsymbol{\theta}_{k+1} = \boldsymbol{\theta}_k - \eta\,\nabla E(\boldsymbol{\theta}_k)$

- New iteration >> $\boldsymbol{\theta}_0 \to |\psi(\boldsymbol{\theta}_0)\rangle \to E(\boldsymbol{\theta}_0) \to \boldsymbol{\theta}_1 \to |\psi(\boldsymbol{\theta}_1)\rangle \to \cdots$ Until convergence

Variational Quantum Eigensolver

- Unlike QPE, VQE does not simulate time evolution but, instead calculates the energy given a Hamiltonian >> In a classical computer that takes exponential resources (if done exactly) and a Quantum Computer can encode the information in N qubits.

- What is left to understand is how do we measure expectation values in a quantum computer.

- In quantum mechanics the expectation value of a Hermitian operator is given by: $E(A) = \langle \psi | A | \psi \rangle$, since the operator is Hermitian: $A | \psi_k \rangle = a_k | \psi_k \rangle$ multiplying by $\langle \psi |$ gives: $\langle \psi_k | A | \psi_k \rangle = a_k \langle \psi_k | \psi_k \rangle = a_k$ >> Namely, the corresponding Eigenvalue.

- Since the Hamiltonian needs to be written in Pauli strings (Pauli operators) we will obtain for every string only one of the eigenvalues of the Pauli operators: +1 or -1 >> The trick to get the Hamiltonian eigenvalue is to measure many times.

How the expectation value is calculated

- Let us consider a simple 2 qubit Hamiltonian in Pauli strings: $H = 0.7\, Z_0 + 0.3\, X_0 Z_1$
- We measure always in Z basis, so $\langle Z_0 \rangle$ can be measured directly but $\langle X_0 Z_1 \rangle$ cannot >> We can change basis from X to Z by using $Z = HXH^\dagger$ where H is the Hadamard gate. Since is Hermitian $H = H^\dagger$, therefore $Z = HXH$.
- We prepare two circuits to measure the expectations $\langle Z_0 \rangle$ and $\langle X_0 Z_1 \rangle$ >> The measurements of, f.e., $\langle X_0 Z_1 \rangle$ will give a bitstring $(b_0, b_1) = |\{0,1\}, \{0,1\}\rangle$ then, the corresponding eigenvalues are: $z_j = \begin{cases} +1, & \text{if } b_j = 0, \\ -1, & \text{if } b_j = 1. \end{cases}$
- Therefore, for every shot we get $p^{(k)} = z_0^{(k)} z_1^{(k)} \in \{+1, -1\}$.
- The expectation value will be: $\langle X_0 Z_1 \rangle = \dfrac{1}{N_{\text{shots}}} \sum_{k=1}^{N_{\text{shots}}} p^{(k)} = P(+1) - P(-1),$
- For example, if we take 1000 shots and measure $|00\rangle, |11\rangle$ 590 times (P+ = 0.590) and 410 times $|01\rangle, |10\rangle$ (P- = 0.410) the expectation value $\langle X_0 Z_1 \rangle$ is 0.590 - 0.410 = 0.180 and supposing that we get $\langle Z_0 \rangle$ = 0.8 the expectation value of the energy is: $0.7 \times 0.8 + 0.3 \times 0.180 = 0.614$

Applicability and limitations

- Is widely used in **Chemistry, Materials theory and Optimization** (specifically the QAOA subset) and it can be used to **benchmark quantum computers.**

- Limitations:

  - The ansatz shall be at the same time accurate (depth) and hardware efficient (shallow) due to coherence times and noise.

  - If the Hamiltonian is long we need many measurements over many terms >> Slow and the noise affects the accuracy of the expectation values.

  - Optimization can be difficult due to noise and plateaus ($\nabla E \approx 0$)

  - Scalability is bad since Ansatzes and Hamiltonians increases in size very rapidly with the size of the problem.

Newer "trends"

- Since VQE relies in an optimization process sensitive to noise and flat potentials one could try to solve it in a "single shot" >> Only 1 iteration.
- Let's take a Hartree-Fock state which is a very simple wavefunction used in Chemistry where orbitals with electrons have a 1 and empty a 0. $|HF\rangle = |111000\rangle = |\phi_0\rangle$
- Let's take a subset of wave functions **(subspace)** based on a one electron excitation $|\phi_1\rangle = a_4^\dagger a_3 |\phi_0\rangle = |110100\rangle$ so, my subspace has two states $\{|\phi_0\rangle, |\phi_1\rangle\}$ only >> The total Hilbert space has $2^6 = 64$ states >> The exact solution requires 64 wavefunctions.
- We can construct easily the matrices:
- $H = \begin{pmatrix} \langle\phi_0|H|\phi_0\rangle & \langle\phi_0|H|\phi_1\rangle \\ \langle\phi_1|H|\phi_0\rangle & \langle\phi_1|H|\phi_1\rangle \end{pmatrix}, \quad S = \begin{pmatrix} 1 & \langle\phi_0|\phi_1\rangle \\ \langle\phi_1|\phi_0\rangle & 1 \end{pmatrix}.$
- Then one can **measure all the expectation values in the quantum computer.**
- Plug the matrices in the *Generalized Eigenvalue Problem* equation: $H\mathbf{c} = E\,S\mathbf{c}$. where $E = [E_0, E_1]$ and c are the coefficients of the wavefunction composed by the two states considered $|\psi_k\rangle = \sum_i c_i^{(k)} |\phi_i\rangle = c_1|\phi_0\rangle + c2|\phi_1\rangle$ where k is the excitation considered >> If we look at the coefficients as vectors then they are the Eigenvectors of the new wavefunction!
- This is solved by **classical diagonalization**
- **We put all together: Quantum Subspace Diagonalization**

Quantum Subspace Diagonalization

- This is very resource efficient and way less noise sensitive than VQE >> At the cost of HPC.

- We obtain at the same time the ground state and as many excited states as we wish (depending on the size of our subspace).

- We do not need an ansatz to obtain better accuracy >> This in quantum chemistry is called Configuration Interaction (CI) and using the whole Hilbert space leads to Full Configuration Interaction (FCI).

- Still, it's more sensitive to gate errors (imperfections in the implementation) than VQE because requires measuring the off-diagonal terms (VQE only measure one expectation value which is diagonal. $\langle \phi_0 | H | \phi_0 \rangle$ >> The off-diagonals require making a **superposition of both states** F.e.: $\frac{1}{\sqrt{2}}\left(|0\rangle |\phi_i\rangle + |1\rangle |\phi_j\rangle \right)$ since there are two wave functions simultaneously, an error in the gates can lead to a shift in the relative phase >> (remember QPE) >> overlaps can get dampened to 0 $\langle \phi_i | \phi_j \rangle \approx 0$ and the result will not be meaningful.